DV 6448 TDP

DC diagonal compact fan

sickle-shaped blades (S series)

ebm-papst St. Georgen GmbH & Co. KG
Hermann-Papst-Str. 1
D-78112 St. Georgen
Phone +49 (0) 7724 81-0
Fax +49 (0) 7724 81-1309
info2@de.ebmpapst.com
www.ebmpapst.com

Nominal data

Type	DV 6448 TDP	
Nominal voltage	VDC	48
Nominal voltage range	VDC	40 .. 55
Speed (rpm)	min^{-1}	5500
Power consumption	W	86.0
Min. ambient temperature	°C	-20
Max. ambient temperature	°C	60
Air flow	m^3/h	680
Sound power level	B	7.9
Sound pressure level	dB(A)	71

ml = Max. load · me = Max. efficiency · fa = Free air · cs = Customer specification · ce = Customer equipment
Subject to change

DC diagonal compact fan

sickle-shaped blades (S series)

Technical description

General description	3-phase fan drive with very smooth operation and high efficiency Housing with grounding lug for M4 x 8 screw (Torx) Power consumption when wide open; these values may be considerably higher at the operating point.
Weight	0.820 kg
Dimensions	172 x 160 x 51 mm
Impeller material	Glass-fiber reinforced PA plastic
Housing material	Die-cast aluminum
Airflow direction	Exhaust over struts
Direction of rotation	Counterclockwise, viewed toward rotor, direction of rotation reversible
Storage	Ball bearing
Service life L10 at 40 °C	65000 h
Service life L10 at maximum temperature	40000 h
Cable	With leads AWG 22, TR 64
Approval	VDE, CSA, UL, CE

ebm-papst St. Georgen GmbH & Co. KG · Hermann-Papst-Str. 1 · D-78112 St. Georgen · Phone +49 (0) 7724 81-0 · Fax +49 (0) 7724 81-1309 · info2@de.ebmpapst.com · www.ebmpapst.com

DC diagonal compact fan

sickle-shaped blades (S series)

Product drawing

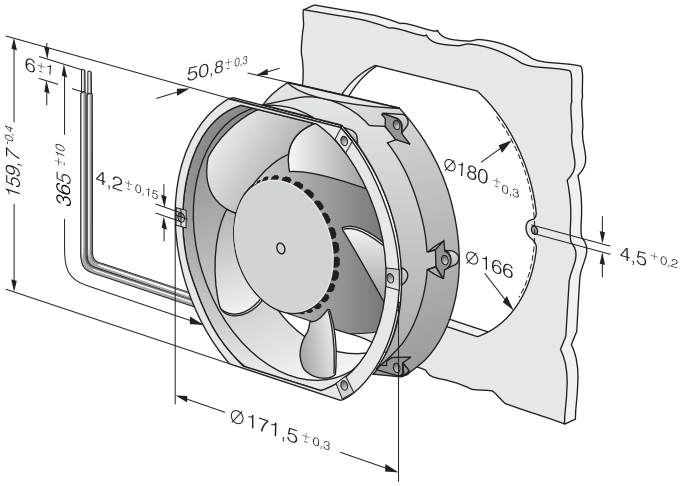

ebm-papst St. Georgen GmbH & Co. KG · Hermann-Papst-Str. 1 · D-78112 St. Georgen · Phone +49 (0) 7724 81-0 · Fax +49 (0) 7724 81-1309 · info2@de.ebmpapst.com · www.ebmpapst.com

DC diagonal compact fan

sickle-shaped blades (S series)

Curves: Air performance

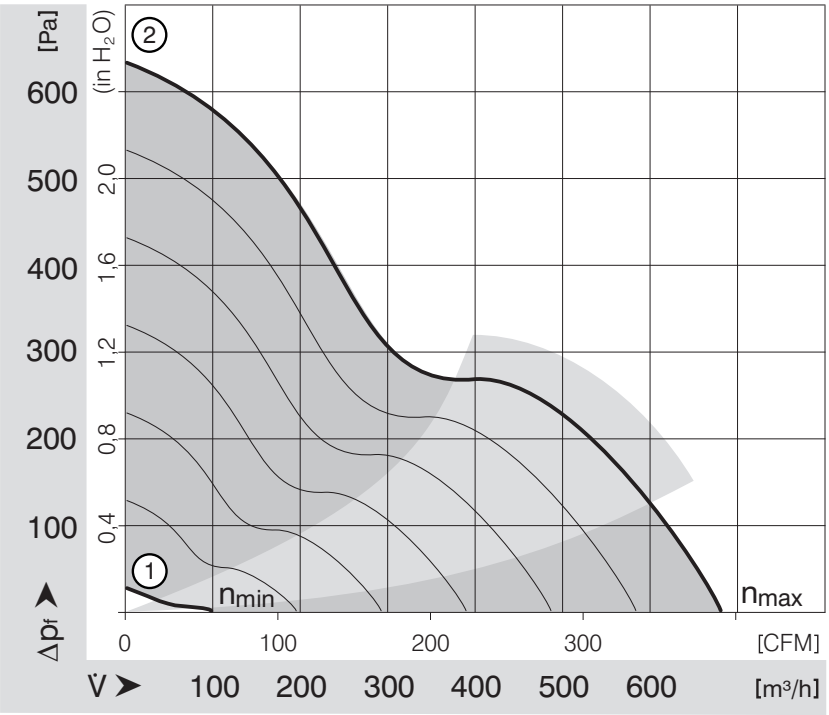

ebm-papst St. Georgen GmbH & Co. KG · Hermann-Papst-Str. 1 · D-78112 St. Georgen · Phone +49 (0) 7724 81-0 · Fax +49 (0) 7724 81-1309 · info2@de.ebmpapst.com · www.ebmpapst.com