ebm-papst Mulfingen GmbH & Co. KG
Bachmühle 2
D-74673 Mulfingen
Phone +49 (0) 7938 81-0
Fax +49 (0) 7938 81-110
info1@de.ebmpapst.com
www.ebmpapst.com

CONTENTS

1. SAFETY REGULATIONS AND INFORMATION 1
1.1 Hazard levels for warnings 1
1.2 Staff qualifications 1
1.3 Basic safety rules 1
1.4 Voltage 1
1.5 Safety and protective features 2
1.6 Electromagnetic radiation 2
1.7 Mechanical movement 2
1.8 Emissions 2
1.9 Hot surface 2
1.10 Transport 2
1.11 Storage 2

2. INTENDED USE 3

3. TECHNICAL DATA 4
3.1 Product drawing 4
3.2 Nominal data 5
3.3 Data according to Commission Regulation (EU) 327/2011 5
3.4 Technical description 5
3.5 Mounting data 6
3.6 Transport and storage conditions 6
3.7 Electromagnetic compatibility 6

4. CONNECTION AND STARTUP 6
4.1 Mechanical connection 6
4.2 Electrical connection 6
4.3 Connection in terminal box 8
4.4 Factory settings 9
4.5 Connection diagram 10
4.6 Checking connections 12
4.7 Switching on the device 12
4.8 Switching off the device 12

5. INTEGRATED PROTECTIVE FEATURES 12

6. MAINTENANCE, MALFUNCTIONS, POSSIBLE CAUSES AND REMEDIES 12
6.1 Cleaning 13
6.2 Safety inspection 14
6.3 Disposal 14

Translation of the original operating instructions

1. SAFETY REGULATIONS AND INFORMATION

Read these operating instructions carefully before starting work on the device. Observe the following warnings to prevent malfunctions or danger to persons.
These operating instructions are to be regarded as part of the device. The device is only to be sold or passed on together with the operating instructions.
These operating instructions may be duplicated and distributed to inform about potential dangers and their prevention.

1.1 Hazard levels for warnings

These operating instructions use the following hazard levels to indicate potentially hazardous situations and important safety regulations:

DANGER
Indicates an imminently hazardous situation which will result in death or serious injury if the specified actions are not taken. Compliance with the instructions is imperative.

WARNING
Indicates a potentially hazardous situation which can result in death or serious injury if the specified actions are not taken. Exercise extreme caution while working.

CAUTION
Indicates a potentially hazardous situation which can result in minor or moderate injury or damage to property if the specified actions are not taken.

NOTE
A potentially harmful situation can occur and, if not avoided, can lead to property damage.

1.2 Staff qualifications

The device may only be transported, unpacked, installed, operated, maintained and otherwise used by suitably qualified, trained and authorized technical staff.
Only authorized specialists are permitted to install the device, to carry out a test run and to perform work on the electrical installation.

1.3 Basic safety rules

The safety hazards associated with the device must be assessed again following installation in the final product.
The locally applicable industrial safety regulations are always to be observed when working on the device.
Keep the workplace clean and tidy. Untidiness in the work area increases the risk of accidents.
Note the following when working on the device:

⇒ Do not perform any modifications, additions or conversions on the device without the approval of ebm-papst.

1.4 Voltage

⇒ Check the device's electrical equipment at regular intervals; see Chapter 6.2 Safety inspection.

⇒ Replace loose connections and defective cables immediately.

DANGER
Electrically charged device
Risk of electric shock

→ When working on an electrically charged device, stand on a rubber mat.

WARNING
Live terminals and connections even with device switched off
Electric shock

→ Wait five minutes after disconnecting the voltage at all poles before opening the device.

CAUTION
In the event of a fault, the rotor and the impeller will be energized
The rotor and the impeller have basic insulation.

→ Do not touch the rotor and impeller once installed.

CAUTION
If control voltage or a stored speed set value is applied, the motor will restart automatically, e.g. after a power failure.
Risk of injury

→ Keep out of the device's danger zone.

→ When working on the device, switch off the line voltage and ensure that it cannot be switched back on.

→ Wait until the device comes to a stop.

→ After working on the device, remove any tools or other objects from the device.

1.5 Safety and protective features

DANGER
Guard missing and guard not functioning
Without a guard, hands may become caught up in the device during operation for example, resulting in serious injury. Loose parts or items of clothing could be drawn in.

→ The device is a built-in component. As the owner, you are responsible for ensuring that the device is adequately safeguarded.# Operate the device only with a fixed protective device and guard grill.

→ Stop the device immediately if a protective device is found to be missing or ineffective.

1.6 Electromagnetic radiation

Interference from electromagnetic radiation is possible, e.g. in conjunction with open- and closed-loop control devices.
If impermissible radiation levels occur following installation, appropriate shielding measures have to be taken by the user.

NOTE
Electrical or electromagnetic interference after installing the device in customer equipment.

→ Verify that the entire setup is EMC-compliant.

1.7 Mechanical movement

DANGER
Rotating device
Risk of injury to body parts coming into contact with the rotor or the impeller.

→ Secure the device against accidental contact.

→ Before working on the system/machine, wait until all parts have come to a standstill.

DANGER
Ejected parts
Missing protective devices may cause balancing weights or broken fan blades to be ejected and cause injuries.

→ Take appropriate safety measures.

WARNING
Rotating device
Long hair and dangling items of clothing, jewelry and the like can become entangled and be pulled into the device. Injuries can result.

→ Do not wear any loose-fitting or dangling clothing or jewelry while working on rotating parts.

→ Protect long hair with a cap.

1.8 Emissions

WARNING
Depending on the installation and operating conditions, the sound pressure level may exceed 70 dB(A).
Risk of noise-induced hearing loss

→ Take appropriate technical safety measures.

→ Protect operating personnel with appropriate safety equipment such as hearing protection.

→ Also observe the requirements of local agencies.

1.9 Hot surface

CAUTION
High temperature on electronics housing
Risk of burns

→ Ensure sufficient protection against accidental contact.

1.10 Transport

WARNING
Transporting the fan
Injuries from tipping or slipping

→ Wear safety shoes and cut-resistant safety gloves.

→ The fan is only to be transported in its original packaging.

→ The fan is to be transported lying flat, i.e. the motor axis must be vertical.

→ Secure the fan(s) e.g. with a lashing strip to stop anything slipping or tipping.

1.11 Storage

⇒ Store the device, partially or fully assembled, in a dry place, protected against the weather and free from vibration, in the original packaging in a clean environment.

⇒ Protect the device against environmental effects and dirt until final installation.

⇒ We recommend storing the device for no longer than one year in order to guarantee trouble-free operation and the longest possible service life.

⇒ Even devices explicitly intended for outdoor use are to be stored as described prior to commissioning.

⇒ Maintain the storage temperature, see Chapter 3.6 Transport and storage conditions.

⇒ Make sure that all cable glands are fitted with dummy plugs.

Translation of the original operating instructions

ebm-papst Mulfingen GmbH & Co. KG · Bachmühle 2 · D-74673 Mulfingen · Phone +49 (0) 7938 81-0 · Fax +49 (0) 7938 81-110 · info1@de.ebmpapst.com · www.ebmpapst.com

2. INTENDED USE

The device is exclusively designed as a built-in device for conveying air according to its technical data.
Any other usage above and beyond this does not conform with the intended purpose and constitutes misuse of the device.
Customer equipment must be capable of withstanding the mechanical and thermal stresses that can arise from this product. This applies for the entire service life of the equipment in which this product is installed.

Intended use also includes

- Using the device only in power systems with grounded neutral (TN/ TT power systems).
- The device is to be used in networks with network quality characteristics as per EN 50160.
- Using the device only in stationary systems.
- Performing all maintenance work.
- Conveying air at an ambient air pressure between 800 mbar and 1050 mbar.
- Using the device within the permitted ambient temperature range; see Chapter 3.6 Transport and storage conditions and Chapter 3.2 Nominal data.
- Operating the device with all protective devices.
- Following the operating instructions.

Improper use

In particular, operating the device in the following ways is prohibited and could be hazardous:

- Operating the device in an unbalanced state, e.g. due to dirt deposits or ice formation.
- Resonant operation, operation with severe vibration. This also includes vibration transmitted to the fan from the customer installation.
- Operation in medical equipment with a life-sustaining or life-support function.
- Conveying solids in the flow medium.
- Painting the device
- Connections (e.g. screws) coming loose during operation.
- Opening the terminal box during operation.
- Conveying air that contains abrasive particles.
- Conveying highly corrosive air, e.g. salt spray. Exception: devices designed for salt spray and correspondingly protected.
- Conveying air with high dust content, e.g. suctioning off sawdust.
- Operating the device close to flammable materials or components.
- Operating the device in an explosive atmosphere.
- Using the device as a safety component or to perform safety-related functions.
- Operation with completely or partially disassembled or manipulated protective devices.
- In addition, all applications not listed among the intended uses.

Translation of the original operating instructions

3. TECHNICAL DATA

3.1 Product drawing

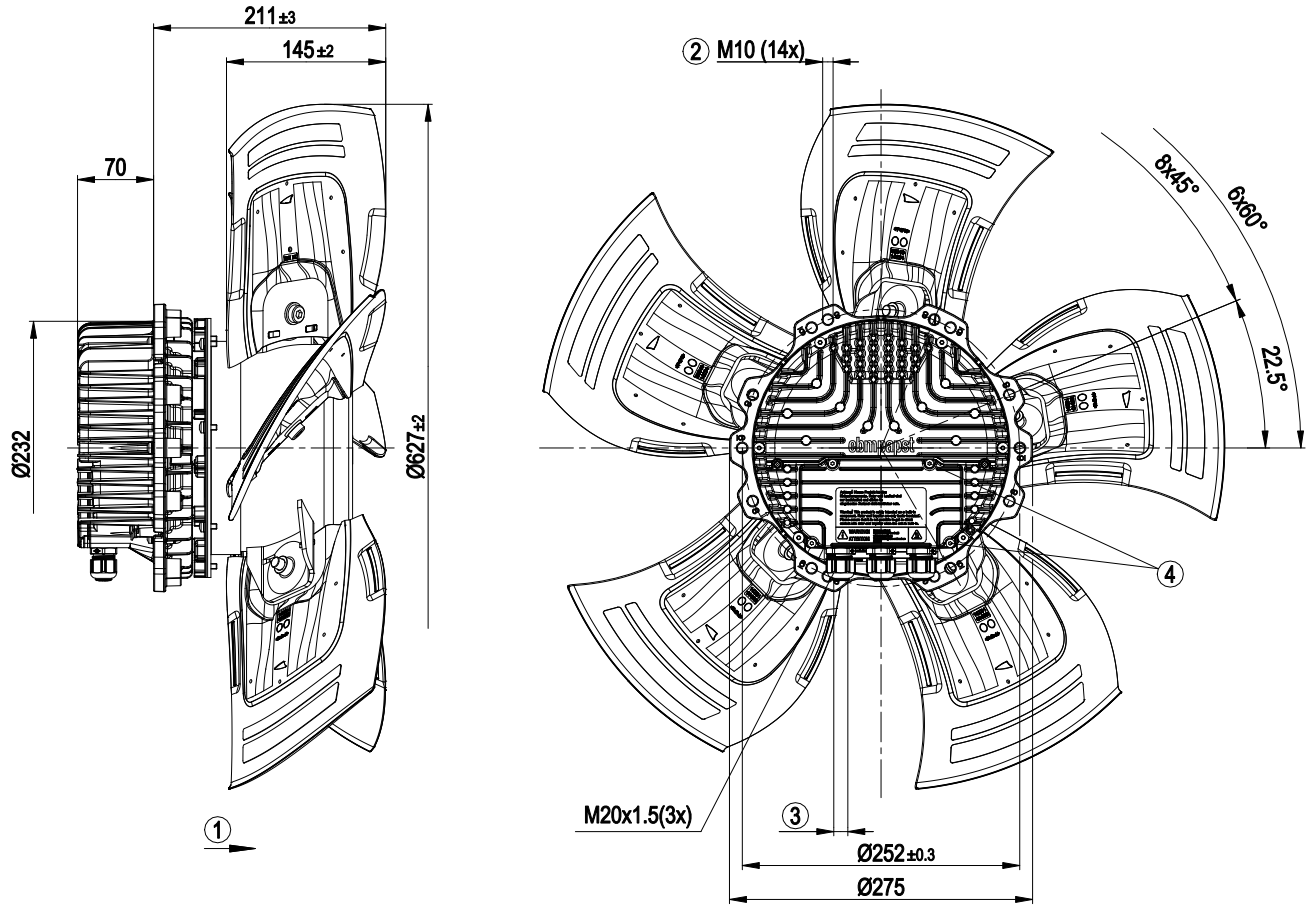

All dimensions in mm.

1	Direction of air flow "A"
2	Max. clearance for screw 25 mm
3	Cable diameter min. 4 mm, max. 10 mm, tightening torque 4 ± 0.6 Nm
4	Tightening torque 3.5 ± 0.5 Nm

Translation of the original operating instructions

ebm-papst Mulfingen GmbH & Co. KG · Bachmühle 2 · D-74673 Mulfingen · Phone +49 (0) 7938 81-0 · Fax +49 (0) 7938 81-110 · info1@de.ebmpapst.com · www.ebmpapst.com

3.2 Nominal data

Motor	M3G150-IF

Phase	3~
Nominal voltage / VAC	400
Nominal voltage range / VAC	380 .. 480
Frequency / Hz	50/60

Method of obtaining data	ml
Speed (rpm) / min^{-1}	1510
Power consumption / W	3200
Current draw / A	5.0
Max. back pressure / Pa	290
Min. ambient temperature / °C	-25
Max. ambient temperature / °C	65

ml = Max. load · me = Max. efficiency · fa = Free air
cs = Customer specification · ce = Customer equipment

Subject to change

3.3 Data according to Commission Regulation (EU) 327/2011

	Actual	Req. 2015
01 Overall efficiency η_{es} / %	39.8	36.6
02 Measurement category	A	
03 Efficiency category	Static	
04 Efficiency grade N	43.2	40
05 Variable speed drive	Yes	
06 Year of manufacture	The year of manufacture is specified on the product's rating label.	
07 Manufacturer	ebm-papst Mulfingen GmbH & Co. KG Amtsgericht (court of registration) Stuttgart · HRA 590344 D-74673 Mulfingen	
08 Type	A3G630-AU23-35	
09 Power consumption P_{ed} / kW	2.93	
09 Air flow q_v / m³/h	16585	
09 Pressure increase total p_{sf} / Pa	241	
10 Speed (rpm) n / min^{-1}	1525	
11 Specific ratio*	1.00	
12 Recycling/disposal	Information on recycling and disposal is provided in the operating instructions.	
13 Maintenance	Information on installation, operation and maintenance is provided in the operating instructions.	
14 Additional components	Components used to calculate the energy efficiency that are not apparent from the measurement category are detailed in the CE declaration.	

* Specific ratio = 1 + p_{fs} / 100 000 Pa

Data obtained at optimum efficiency level. The ErP data is determined using a motor-impeller combination in a standardized measurement setup.

3.4 Technical description

Weight	25.4 kg
Size	630 mm
Motor size	150
Rotor surface	Painted black
Electronics housing material	Die-cast aluminum, painted black
Blade material	Sheet aluminum insert (painted black), sprayed with PP plastic
Number of blades	5
Blade pitch	0°
Airflow direction	A
Direction of rotation	Counterclockwise, viewed toward rotor
Degree of protection	IP55
Insulation class	"F"
Moisture (F) / Environmental (H) protection class	H2+A
Installation position	Shaft horizontal or rotor on top; rotor on bottom on request
Condensation drainage holes	On stator side
Mode	S1
Motor bearing	Ball bearing
Technical features	- Output 10 VDC, max. 10 mA - Output 20 VDC, max. 50 mA - Output for slave 0-10 V - Input for sensor 0-10 V or 4-20 mA - External 24 V input (parameter setting) - External release input - Alarm relay - Integrated PID controller - Power limiter - Motor current limitation - PFC, passive - RS-485 MODBUS-RTU - Soft start - EEPROM write cycles: 100,000 maximum - Control input 0-10 VDC / PWM - Control interface with SELV potential safely disconnected from the mains - Thermal overload protection for electronics/motor - Line undervoltage / phase failure detection
Touch current according to IEC 60990 (measuring circuit Fig. 4, TN system)	<= 3.5 mA
Electrical hookup	Terminal box
Motor protection	Reverse polarity and locked-rotor protection
Protection class	I (with customer connection of protective earth)
Conformity with standards	EN 61800-5-1; CE
Approval	CSA C22.2 No. 77 + CAN/CSA-E60730-1; EAC; UL 1004-7 + 60730-1

Translation of the original operating instructions

ebm-papst Mulfingen GmbH & Co. KG · Bachmühle 2 · D-74673 Mulfingen · Phone +49 (0) 7938 81-0 · Fax +49 (0) 7938 81-110 · info1@de.ebmpapst.com · www.ebmpapst.com

With regard to cyclic speed loads, note that the rotating parts of the device are designed for a maximum of one million load cycles. If you have special questions, consult ebm-papst for support.

⇒ Use the device in accordance with its degree of protection.

Information on surface quality

The surfaces of the products conform to the generally applicable industrial standard. The surface quality may change during the production period. This has no effect on strength, dimensional stability and dimensional accuracy.
The color pigments in the paints used perceptibly react to UV light over the course of time. This does not however in any way affect the technical properties of the products. The product is to be protected against UV radiation to prevent the formation of patches and fading. Changes in color are not a reason for complaint and are not covered by the warranty.

3.5 Mounting data

Any further mounting data required can be taken from the product drawing or Section Chapter 4.1 Mechanical connection.

Strength class of screws	8.8

⇒ Secure the screws against unintentional loosening (e.g. use self-locking screws).

3.6 Transport and storage conditions

Max. permitted ambient temp. for motor (transport/ storage)	+80 °C
Min. permitted ambient temp. for motor (transport/ storage)	-40 °C

3.7 Electromagnetic compatibility

If several devices are switched in parallel on the supply side so that the line current of the arrangement is in the range of 16-75 A, then this arrangement conforms to IEC 61000-3-12 provided that the short-circuit power S_{sc} at the connection point of the customer system to the public power system is greater than or equal to 120 times the rated output of the arrangement. It is the responsibility of the installation engineer or operator/ owner of the device to ensure, if necessary after consultation with the network operator, that this device is only connected to a connection point with a S_{sc} value that is greater than or equal to 120 times the rated output of the arrangement.

4. CONNECTION AND STARTUP

4.1 Mechanical connection

CAUTION
Cutting and crushing hazard when removing fan from packaging

→ Carefully remove the device from its packaging, grasping it by only the blades near the hub. Strictly avoid shocks.

→ Wear safety shoes and cut-resistant safety gloves.

CAUTION
Device weighs over 25 kg! Heavy load when unpacking device.
Risk of physical injury, such as back injuries.

→ Use suitable hoisting equipment to remove the device from its packaging.

CAUTION
The blades of the impeller could be damaged.

→ Carefully set down the fan on a soft surface. Make sure the blades are not subjected to load.

→ Following installation, make sure the impeller moves easily and that the blades of the impeller are not deformed or bent and do not catch at any point.

NOTE
Damage to the device from vibration
Bearing damage, shorter service life

→ The fan must not be subjected to force or excessive vibration from sections of the installation.

→ If the fan is connected to air ducts, the connection should be isolated from vibration, e.g. using compensators or similar elements.

→ Ensure stress-free attachment of the fan to the substructure.

⇒ Check the device for transport damage. Damaged devices are not to be installed.

⇒ Install the undamaged device in accordance with your application.

CAUTION
Possible damage to the device
If the device slips during installation, serious damage can result.

→ Ensure that the device is securely positioned at its place of installation until all fastening screws have been tightened.

- The fan must not be strained on fastening.

4.2 Electrical connection

DANGER
Voltage on the device
Electric shock

→ Always connect a protective earth first.

→ Check the protective earth.

DANGER
Faulty insulation
Risk of fatal injury from electric shock

→ Use only cables that meet the specified installation regulations for voltage, current, insulation material, capacity, etc.

→ Route cables so that they cannot be touched by any rotating parts.

Translation of the original operating instructions

ebm-papst Mulfingen GmbH & Co. KG · Bachmühle 2 · D-74673 Mulfingen · Phone +49 (0) 7938 81-0 · Fax +49 (0) 7938 81-110 · info1@de.ebmpapst.com · www.ebmpapst.com

DANGER
Electrical charge (>50 µC) between phase conductor and protective earth connection after switching off supply with multiple devices connected in parallel.
Electric shock, risk of injury

→ Ensure sufficient protection against accidental contact. Before working on the electrical hookup, short the supply and PE connections.

CAUTION
Voltage
The fan is a built-in component and has no disconnecting switch.

→ Only connect the fan to circuits that can be switched off with an all-pole disconnection switch.

→ When working on the fan, secure the system/machine in which the fan is installed so as to prevent it from being switched back on.

NOTE
Device malfunctions possible
Route the device's control lines separately from the supply line.

→ Maintain the greatest possible clearance. Recommendation: clearance > 10 cm (separate cable routing)

NOTE
Water ingress into wires or cables
Water ingress at the customer end of the cable can damage the device.

→ Make sure the end of the cable is connected in a dry environment.

Only connect the device to circuits that can be switched off with an all-pole disconnection switch.

4.2.1 Requirements

⇒ Check whether the information on the nameplate matches the connection data.

⇒ Before connecting the device, make sure the power supply matches the device voltage.

⇒ Only use cables designed for the current level indicated on the nameplate.
For determining the cross-section, note the sizing criteria according to EN 61800-5-1. The protective earth must have a cross-section equal to or greater than that of the phase conductor.
We recommend the use of 105 °C cables. Ensure that the minimum cable cross-section is at least
AWG 26 / 0.13 mm².

Protective earth contact resistance according to EN 61800-5-1

Compliance with the resistance specifications according to EN 61800-5-1 for the protective earth connection circuit must be verified in the end application. Depending on the installation situation, it may be necessary to connect an additional protective earth conductor by way of the extra protective earth terminal provided on the device. The protective earth terminal is located on the housing and provided with a protective earth symbol and a hole.

4.2.2 Supply connection and fuses

Assignment of supply cable cross-sections and their required fuses (line protection only, no equipment protection).

Nominal voltage	Fuse		Automatic circuit breaker	Cable cross-section	Cable cross-section
	VDE	UL	VDE	mm²	*AWG
3/PE AC 380-480 VAC	16 A	15 A	C16A	1.5	16
3/PE AC 380-480 VAC	20 A	20 A	C20A	2.5	14
3/PE AC 380-480 VAC	25 A	25 A	C25A	4.0	12

* AWG = American Wire Gauge

4.2.3 Reactive currents

Because of the EMC filter integrated for compliance with EMC limits (interference emission and immunity to interference), reactive currents can be measured in the supply line even when the motor is at a standstill and the line voltage is switched on.

- The values are typically in the range < 250 mA
- At the same time, the effective power in this operating state (operational readiness) is typically < 5 W.

4.2.4 Residual current circuit breaker (RCCB)

If the use of a residual current device (RCD) is required in your installation, only AC/DC-sensitive residual current devices (type B or B+) are permissible. As with variable frequency drives, residual current devices cannot provide personal safety while operating the device. When the device power supply is switched on, pulsed charging currents from the capacitors in the integrated EMC filter can lead to the instant tripping of residual current devices. We recommend the use of residual current circuit breakers (RCCB) with a trip threshold of 300 mA and delayed tripping (super-resistant, characteristic K).

4.2.5 Leakage current

For asymmetrical power systems or if a phase fails, the leakage current can increase to a multiple of the nominal value.

4.2.6 Locked-rotor protection

Due to the locked-rotor protection, the starting current (LRA) is equal to or less than the nominal current (FLA).

Translation of the original operating instructions

ebm-papst Mulfingen GmbH & Co. KG · Bachmühle 2 · D-74673 Mulfingen · Phone +49 (0) 7938 81-0 · Fax +49 (0) 7938 81-110 · info1@de.ebmpapst.com · www.ebmpapst.com

4.3 Connection in terminal box

4.3.1 Preparing cables for connection

Only strip the cable as far as necessary, ensuring that the cable gland is sealed and there is no strain on the connections. For tightening torques, see Chapter 3.1 Product drawing.

NOTE
Tightness and strain relief are dependent on the cable used.

→ This must be checked by the user.

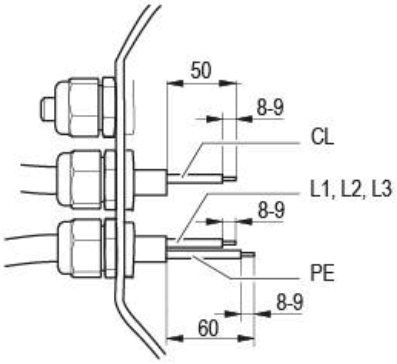

Fig. 1: Recommended stripped lengths in mm (inside terminal box)
Legend: CL = control lines

4.3.2 Connecting wires to terminals

WARNING
Live terminals and connections even with device switched off
Electric shock

→ Wait five minutes after disconnecting the voltage at all poles before opening the device.

⇒ Remove the cap from the cable gland.

Only remove caps where cables are fed in.

⇒ Equip the cable glands with the seals provided in the terminal box.

⇒ Route the wire(s) (not included in scope of delivery) into the terminal box.

⇒ First connect the "PE" (protective earth).

⇒ Connect the wires to the corresponding terminals.

Use a screwdriver to do so.
When connecting, ensure that no wire ends fan out.

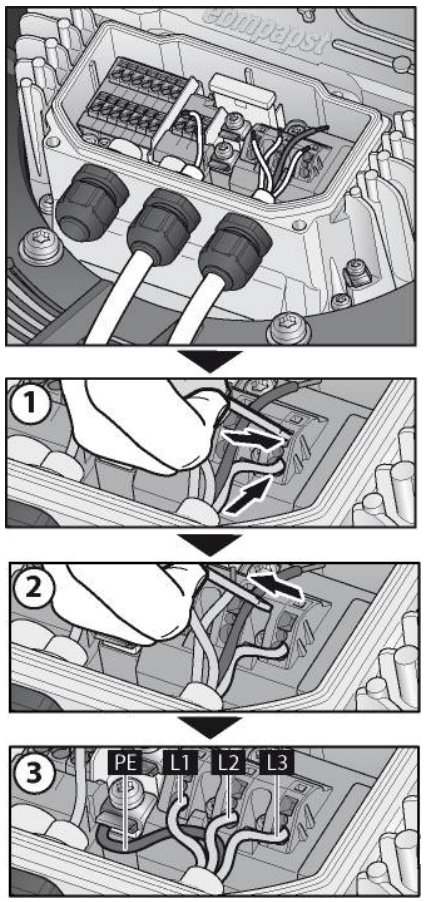

Fig. 2: Connecting wires to terminals

⇒ Seal the terminal box.

4.3.3 Cable routing

Water must be prevented from reaching the cable gland along the cable.

NOTE
Damage caused by moisture penetration.
Moisture can penetrate into the terminal box if water is constantly present at the cable glands.

→ To prevent the constant accumulation of water at the cable glands, the cable should be routed in a U-shaped loop wherever possible.

→ If this is not possible, a drip edge can be produced by fitting a cable tie directly in front of the cable gland for example.

Fans installed lying flat

Make sure the cable is routed in a U-shaped loop.

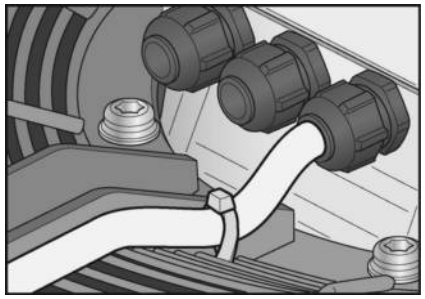

Fig. 3: Fan installed lying flat, cable routed in a U-shaped loop.

Translation of the original operating instructions

ebm-papst Mulfingen GmbH & Co. KG · Bachmühle 2 · D-74673 Mulfingen · Phone +49 (0) 7938 81-0 · Fax +49 (0) 7938 81-110 · info1@de.ebmpapst.com · www.ebmpapst.com

Fans installed upright

When routing the cable, make sure that the cable glands are located at the bottom. The cables must always be routed downward.

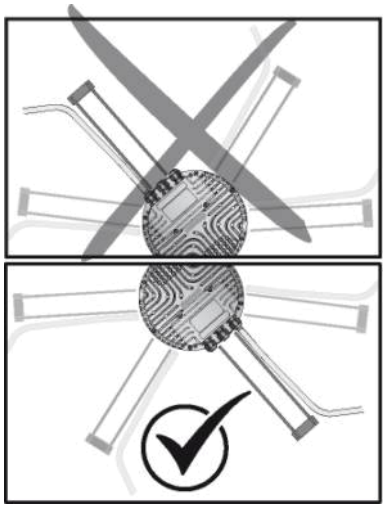

Fig. 4: Cable routing for fans installed upright.

4.4 Factory settings

Factory settings made for the device by ebm-papst.

Mode parameter set 1	PWM control
Mode parameter set 2	PWM control
Fan/device address	1
Max. PWM / %	100
Min. PWM / %	5
Save set value to EEPROM	Yes
Set value requirement	Analog (linear)
Direction of action parameter set 1	Positive (heating)
Direction of action parameter set 2	Positive (heating)

Translation of the original operating instructions

ebm-papst Mulfingen GmbH & Co. KG · Bachmühle 2 · D-74673 Mulfingen · Phone +49 (0) 7938 81-0 · Fax +49 (0) 7938 81-110 · info1@de.ebmpapst.com · www.ebmpapst.com

4.5 Connection diagram

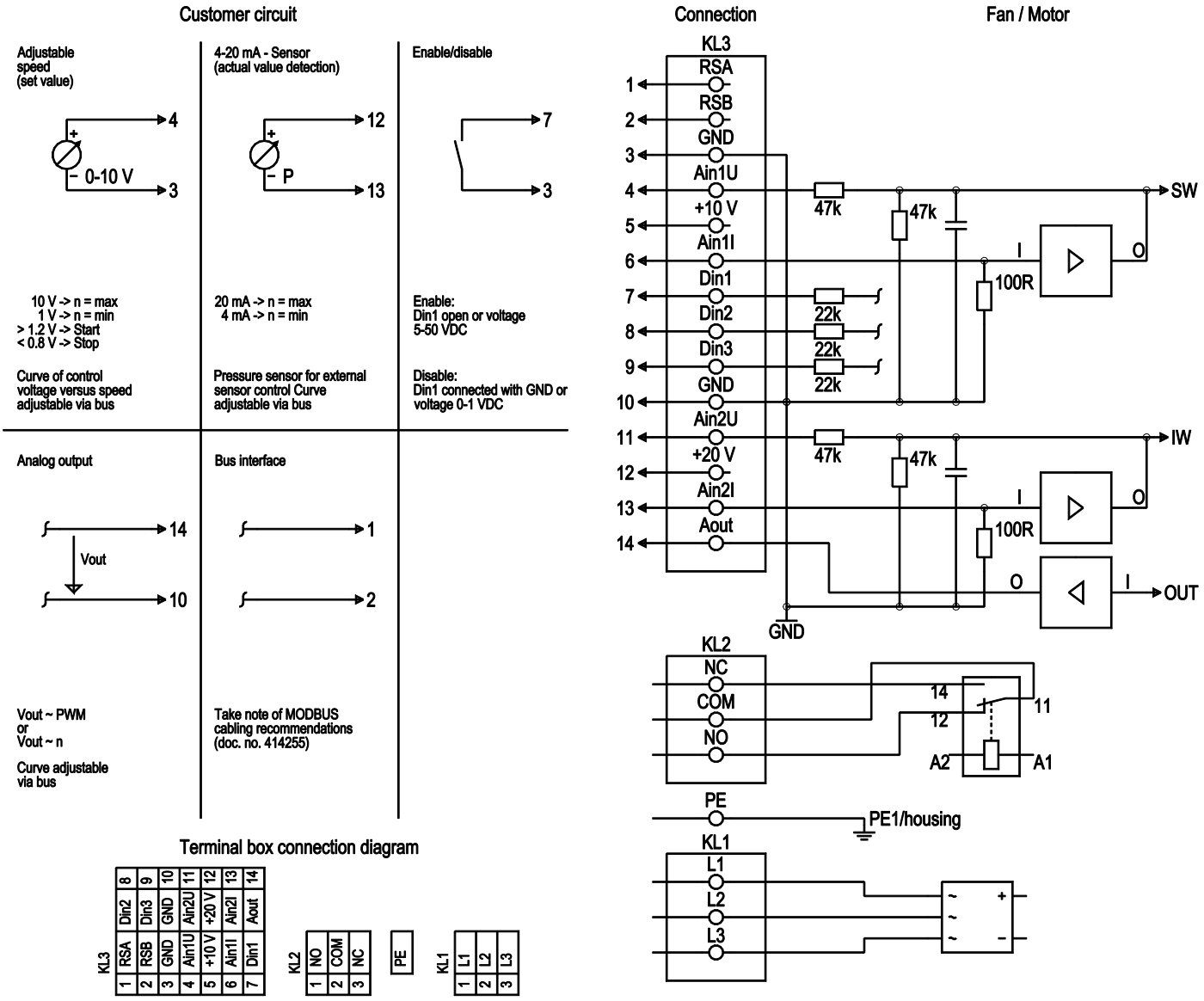

Drawing preliminary!

No.	Conn.	Designation	Function/assignment
KL 1	1	L1	Supply connection, power supply; for nominal voltage range see technical data
KL 1	2	L2	Supply connection, power supply; for nominal voltage range see technical data
KL 1	3	L3	Supply connection, power supply; for nominal voltage range see technical data
PE		PE	Ground connection, PE connection
KL 2	1	NO	Status relay, floating status contact, make for failure
KL2	2	COM	Status relay, floating status contact, changeover contact, common connection, contact rating 250 VAC / max. 2 A (AC1) / min. 10 mA
KL2	3	NC	Status relay, floating status contact, break for failure
KL 3	1	RSA	Bus connection RS485, RSA, MODBUS-RTU; SELV
KL 3	2	RSB	Bus connection RS485, RSB, MODBUS-RTU; SELV
KL 3	3 / 10	GND	Reference ground for control interface; SELV
KL 3	4	Ain1 U	Analog input 1, set value: 0-10 V, Ri = 100 kΩ, adjustable curve, only usable as alternative to input Ain1I; SELV
KL 3	5	+ 10 V	Fixed voltage output 10 VDC, +10 V ±3%, max. 10 mA, short-circuit-proof power supply for external devices (e.g. pot); SELV

Translation of the original operating instructions

ebm-papst Mulfingen GmbH & Co. KG · Bachmühle 2 · D-74673 Mulfingen · Phone +49 (0) 7938 81-0 · Fax +49 (0) 7938 81-110 · info1@de.ebmpapst.com · www.ebmpapst.com

No.	Conn.	Designation	Function/assignment
KL 3	6	Ain1 I	Analog input 1, set value: 4-20 mA, Ri = 100 Ω, adjustable curve, only usable as alternative to input Ain1U; SELV
KL 3	7	Din1	Digital input 1: enable electronics, enable: pin open or applied voltage 5-50 VDC disable: bridge to GND or applied voltage < 1 VDC reset function: triggers software reset after a level change to < 1 VDC; SELV
KL 3	8	Din2	Digital input 2: Switching parameter sets 1/2, according to EEPROM setting, the valid or used parameter set can be selected via bus or via digital input DIN2. Parameter set 1: pin open or applied voltage 5-50 VDC Parameter set 2: bridge to GND or applied voltage < 1 VDC; SELV
KL 3	9	Din3	Digital input 3: according to EEPROM setting, the integrated controller's direction of action can be selected via bus or digital input Din3; normal: pin open or applied voltage 5-50 VDC inverse: bridge to GND or applied voltage < 1 VDC; SELV
KL 3	11	Ain2 U	Analog input 2, measured value: 0-10 V, Ri = 100 kΩ, adjustable curve, only usable as alternative to input Ain2I; SELV
KL 3	12	+ 20 V	Fixed voltage output 20 VDC, +20 V +25/-10%, max. 50 mA, short-circuit-proof power supply for external devices (e.g. sensors); SELV or: +24 VDC input for parameter setting without line voltage
KL 3	13	Ain2 I	Analog input 2, measured value: 4-20 mA, Ri = 100 Ω, adjustable curve, only usable as alternative to input Ain2U; SELV
KL 3	14	Aout	Analog output 0-10 VDC, max. 5 mA, output of current motor modulation level / motor speed adjustable curve; SELV

Translation of the original operating instructions

ebm-papst Mulfingen GmbH & Co. KG · Bachmühle 2 · D-74673 Mulfingen · Phone +49 (0) 7938 81-0 · Fax +49 (0) 7938 81-110 · info1@de.ebmpapst.com · www.ebmpapst.com

4.6 Checking connections

⇒ Ensure isolation from supply (all phases).

⇒ Make sure a restart is impossible

⇒ Check the cables for proper fit.

⇒ Screw the terminal box cover back on again. Terminal box tightening torque, see Chapter 3.1 Product drawing.

⇒ Route the cables in the terminal box so that the terminal box cover closes without resistance.

⇒ Use all screw plugs. Insert the screws by hand to avoid damage to the threads.

⇒ Make sure the terminal box is completely closed and sealed and that all screws and cable glands have been properly tightened.

4.7 Switching on the device

The device may only be switched on if it has been installed properly and in accordance with its intended use, including the required safety mechanisms and professional electrical hookup. This also applies for devices which have already been equipped with plugs and terminals or similar connectors by the customer.

WARNING
Hot motor housing
Risk of fire

→ Ensure that no combustible or flammable materials are located close to the fan.

⇒ Before switching on, check the device for visible external damage and make sure the protective devices are functional.

⇒ Check the fan's air flow paths for foreign matter and remove any foreign matter found.

⇒ Apply the nominal supply voltage.

⇒ Start the device by changing the input signal.

NOTE
Damage to the device from vibration
Bearing damage, shorter service life

→ Low-vibration operation of the fan must be ensured over the entire speed control range.

→ Severe vibration can arise for instance from inexpert handling, transportation damage and resultant imbalance or be caused by component or structural resonance.

→ Speed ranges with excessively high vibration levels and possibly resonant frequencies must be determined in the course of fan commissioning.

→ Either run through the resonant range as quickly as possible with speed control or find another remedy.

→ Operation with excessively high vibration levels can lead to premature failure.

4.8 Switching off the device

Switching off the device during operation:

⇒ Switch off the device via the control input.

⇒ Do not switch the motor (e.g. in cyclic operation) on and off via power supply.

Switching off the device for maintenance:

⇒ Switch off the device via the control input.

⇒ Do not switch the motor (e.g. in cyclic operation) on and off via power supply.

⇒ Disconnect the device from the power supply.

⇒ When disconnecting, be sure to disconnect the ground connection last.

5. INTEGRATED PROTECTIVE FEATURES

The integrated protective functions cause the motor to switch off automatically in the event of the faults described in the table.

Fault	Safety feature description/ function
Rotor position detection error	An automatic restart follows.
Blocked rotor	⇒ After the blockage is removed, the motor restarts automatically.
Line undervoltage (line voltage outside of permitted nominal voltage range)	⇒ If the line voltage returns to permitted values, the motor restarts automatically.
Phase failure	A phase of the supply voltage fails for at least 5 s. ⇒ When all phases are correctly supplied again, the motor automatically restarts after 10-40 s.

6. MAINTENANCE, MALFUNCTIONS, POSSIBLE CAUSES AND REMEDIES

Do not perform any repairs on your device. Send the device to ebm-papst for repair or replacement.

WARNING
Live terminals and connections even with device switched off
Electric shock

→ Wait five minutes after disconnecting the voltage at all poles before opening the device.

CAUTION
If control voltage or a stored speed set value is applied, the motor will restart automatically, e.g. after a power failure.
Risk of injury

→ Keep out of the device's danger zone.

→ When working on the device, switch off the line voltage and ensure that it cannot be switched back on.

→ Wait until the device comes to a stop.

→ After working on the device, remove any tools or other objects from the device.

NOTE
If the device is not operated for a lengthy period in installed condition in a dry environment, it is to be started up and operated at full speed for one hour at least every four months. If the device is not operated for a lengthy period in installed condition in a damp environment (e.g. outdoors), it is to be started up and operated at full speed for at least three hours once a month to move the bearings and allow any condensate that may have ingressed to evaporate.

Malfunction/fault	Possible cause	Possible remedy

Translation of the original operating instructions

ebm-papst Mulfingen GmbH & Co. KG · Bachmühle 2 · D-74673 Mulfingen · Phone +49 (0) 7938 81-0 · Fax +49 (0) 7938 81-110 · info1@de.ebmpapst.com · www.ebmpapst.com

Impeller not running smoothly	Imbalance in rotating parts	Clean the device; replace it if imbalance persists after cleaning. Make sure no weight clips are removed during cleaning.
Motor not turning	Mechanical blockage	Switch off, isolate from supply and remove mechanical blockage.
	Line voltage faulty	Check line voltage, restore power supply. Attention! The error message resets automatically. Device restarts automatically without warning.
	Faulty connection	Isolate from supply, correct connection; see connection diagram.
	Broken motor winding	Replace device
	Deficient cooling	Improve cooling. Let the device cool down. To reset the error message, switch off the line voltage for at least 25 s and then switch it on again. Alternatively, reset the error message by applying a control signal of < 0.5 V to Din1 or by shorting Din1 to GND.
	Ambient temperature too high	Reduce the ambient temperature. Let the device cool down. To reset the error message, switch off the line voltage for at least 25 s and then switch it on again. Alternatively, reset the error message by applying a control signal of < 0.5 V to Din1 or by shorting Din1 to GND.
	Impermissible point of operation (e.g. back pressure too high)	Correct the operating point. Let the device cool down. To reset the error message, switch off the line voltage for at least 25 s and then switch it on again. Alternatively, reset the error message by applying a control signal of < 0.5 V to Din1 or by shorting Din1 to GND.

In the event of further malfunctions, contact ebm-papst.

6.1 Cleaning

To ensure a long service life, check the fans regularly for proper operation and soiling. The frequency of checking is to be adapted accordingly depending on the degree of soiling.

DANGER
Risk of injury from rotating fan.

→ Only clean when not in motion. Do not disconnect the fan from the power supply, just switch it off via the control input. This will prevent start-up of the fan.

⇒ Dirt deposits on the motor housing can cause overheating of the motor.

⇒ Soiling of the impeller can cause vibration that will shorten the service life of the fan.

⇒ Severe vibration can destroy the fan.

⇒ In such cases, switch off the fan immediately and clean it.

⇒ The preferred method of cleaning is dry cleaning, e.g. using compressed air.

⇒ Do not use aggressive cleaning agents!

⇒ Before cleaning, run the fan for an hour at min. 80% speed.

⇒ Check the tightness of the cable glands.

⇒ As is standard procedure for barn cleaning, the dried-on dirt first has to be loosened by soaking. If the fans are not treated by the stationary soaking installation in the barn, they have to be manually soaked separately using a hosepipe or knapsack sprayer for example.

Instructions for cleaning

Translation of the original operating instructions

ebm-papst Mulfingen GmbH & Co. KG · Bachmühle 2 · D-74673 Mulfingen · Phone +49 (0) 7938 81-0 · Fax +49 (0) 7938 81-110 · info1@de.ebmpapst.com · www.ebmpapst.com

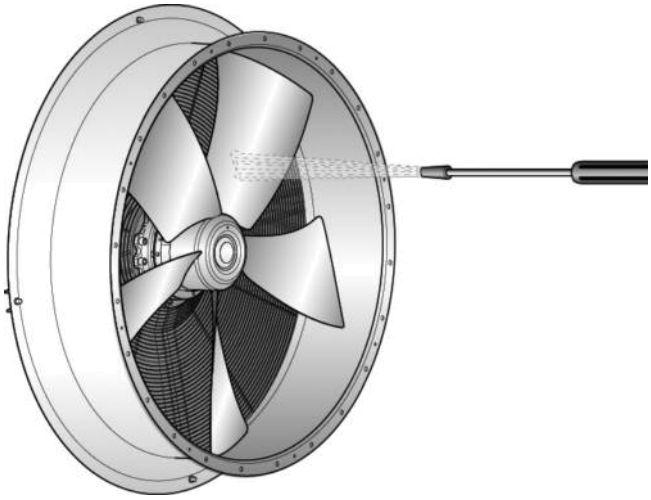

Fig. 5: Cleaning of the fan with a high-pressure cleaner.

- ⇒ Maximum water pressure 80 bar
- ⇒ Minimum clearance between water outlet and fan 40 cm
- ⇒ The water jet must be aimed perpendicularly to the blades.
- ⇒ If possible, only aim the water jet at the rotating parts.
- ⇒ Do not aim the water jet directly at the condensation drainage hole (if applicable).
- ⇒ When cleaning the electronics housing, do not aim the water jet directly at the terminal box cover or cable glands.
- ⇒ If there is a condensation drainage hole in the rotor, make sure this is not blocked by dirt.
- ⇒ Completely remove any cleaning agents used.
- ⇒ If severe corrosion is visible on load-bearing or rotating parts, switch off the device immediately and replace it.
- ⇒ Repair of load-bearing or rotating parts is not permitted!
- ⇒ Operate the fan for 2 hours at maximum speed so that any water that has ingressed can evaporate.
- ⇒ If cleaning does not eliminate vibrations, the fan may need to be rebalanced. To have it rebalanced, contact ebm-papst.
- ⇒ The fan is equipped with maintenance-free ball bearings. The lifetime lubrication of the ball bearings is designed for a service life of 40,000 hours.
- ⇒ If bearing replacement is necessary after that period, contact ebm-papst.
- ⇒ Adapt the maintenance intervals to the actual level of dust exposure.

6.2 Safety inspection

NOTE
High-voltage test
The integrated EMC filter has Y capacitors. The tripping current is exceeded when AC testing voltage is applied.

→ Test the device with DC voltage when you perform the legally required high-voltage test. The voltage to be used corresponds to the peak value of the AC voltage required by the standard.

What to check	How to check	How often	What action?
Contact protection cover for intactness or damage	Visual inspection	At least every 6 months	Repair or replacement of device
Device for damage to blades and housing	Visual inspection	At least every 6 months	Replacement of device
Fastening the cables	Visual inspection	At least every 6 months	Fasten
Insulation of cables for damage	Visual inspection	At least every 6 months	Replace cables
Tightness of cable gland	Visual inspection	At least every 6 months	Retighten, replace if damaged
Condensation drainage holes for clogging, where necessary	Visual inspection	At least every 6 months	Open holes
Welds for crack formation	Visual inspection	At least every 6 months	Replace device
Abnormal bearing noise	acoustic	At least every 6 months	Replace device

6.3 Disposal

For ebm-papst, environmental protection and resource preservation are top priority corporate goals.
ebm-papst operates an environmental management system which is certified in accordance with ISO 14001 and rigorously implemented around the world on the basis of German standards.
Right from the development stage, ecological design, technical safety and health protection are fixed criteria.
The following section contains recommendations for ecological disposal of the product and its components.

6.3.1 Country-specific legal requirements

NOTE
Country-specific legal requirements
Always observe the applicable country-specific legal regulations with regard to the disposal of products or waste occurring in the various phases of the life cycle. The corresponding disposal standards are also to be heeded.

6.3.2 Disassembly

Disassembly of the product must be performed or supervised by qualified personnel with the appropriate technical knowledge.
The product is to be disassembled into suitable components for disposal employing standard procedures for motors.

WARNING
Heavy parts of the product may drop off. Some of the product components are heavy. These components could drop off during disassembly.
This can result in fatal or serious injury and material damage.

→ Secure components before unfastening to stop them falling.

Translation of the original operating instructions

ebm-papst Mulfingen GmbH & Co. KG · Bachmühle 2 · D-74673 Mulfingen · Phone +49 (0) 7938 81-0 · Fax +49 (0) 7938 81-110 · info1@de.ebmpapst.com · www.ebmpapst.com

6.3.3 Component disposal

The products are mostly made of steel, copper, aluminum and plastic. Metallic materials are generally considered to be fully recyclable. Separate the components for recycling into the following categories:

- Steel and iron
- Aluminum
- Non-ferrous metal, e.g. motor windings
- Plastics, particularly with brominated flame retardants, in accordance with marking
- Insulating materials
- Cables and wires
- Electronic scrap, e.g. circuit boards

Only ferrite magnets and not rare earth magnets are used in external rotor motors from ebm-papst Mulfingen GmbH & Co. KG.

⇒ Ferrite magnets can be disposed of in the same way as normal iron and steel.

Electrical insulating materials on the product, in cables and wires are made of similar materials and are therefore to be treated in the same manner.
The materials concerned are as follows:

- Miscellaneous insulators used in the terminal box
- Power cables
- Cables for internal wiring
- Electrolytic capacitors

Dispose of electronic components employing the proper procedures for electronic scrap.

→ Please contact ebm-papst for any other questions on disposal.

Translation of the original operating instructions

ebm-papst Mulfingen GmbH & Co. KG · Bachmühle 2 · D-74673 Mulfingen · Phone +49 (0) 7938 81-0 · Fax +49 (0) 7938 81-110 · info1@de.ebmpapst.com · www.ebmpapst.com